Model G6-55
Rotary Gear Pump

Surex rotary gear pumps designed for foam extinguishing system. They are Self-Priming and can pump Multiple Viscosities of Foam or Water. This versatile design is suitable for Electric, PTO, Diesel/Gasoline Engine, Water Driven or Hydraulic drive motors.

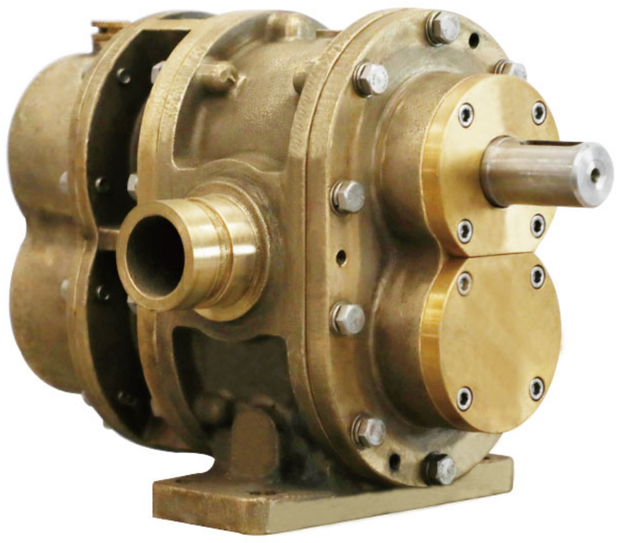

FM APPROVED

Design Features:

- Timing Gears Synchronize the Two Pumping Rotors.
- Timing Gears Allow for DRY Running Without Damage.
- No Rotor Contact Allows for Pumping Foam or Water.
- Water Can Be Used for: Calibration, Testing and Training.

Technical Data:

Max Pressure: 2.0MPa | 20bar
Max Speed: 1800RPM
Viscosity: 9500cp max.[1]
Connection Diameter: DN40(48.3 O.D.)、1½"
Connection Type: Groove、Thread、Flange
Approvals: FM
[1]Brookfield viscometer, spindle #4, speed 30rpm.

Materials:

Pump body: Red Brass, ASTM B584 C83600
Rotor: Stainless Steel 17-4PH
Red Brass, ASTM B584 C83600
Liners: Red Brass, ASTM B584 C83600
Front Cover: Red Brass, ASTM B584 C83600
Back Cover: Red Brass ASTM B584 C83600
Timing Gear: Alloy Steel 20CrMnTi (ASTM A29M)
Lip Seal: FPM

Performance -Water

Foam Pump	1000rpm			1200rpm			1500rpm			1800rpm		
Pressure	Flow	Power	Torque	Flow	Power	Torque	Flow	Power	Torque	Flow	Power	Torque
bar	L/min	kw	N.m	L/min	kw	N.m	L/min	kw	N.m	L/min	kw	N.m
5.0	106	2	19	136	3	21	184	4	23	233	5	25
6.9	97	3	25	128	3	25	176	4	29	224	5	35
10.3	84	4	33	115	4	32	163	6	36	211	7	43
13.8	74	4	41	105	6	40	153	7	44	200	8	50
17.2	66	5	48	96	7	49	144	8	52	192	10	57
20.0	61	6	58	91	8	60	138	10	61	186	11	60

Dimensions

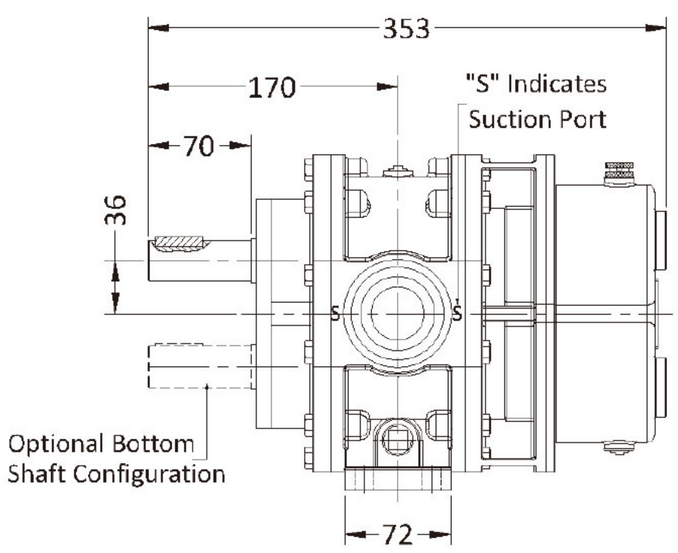

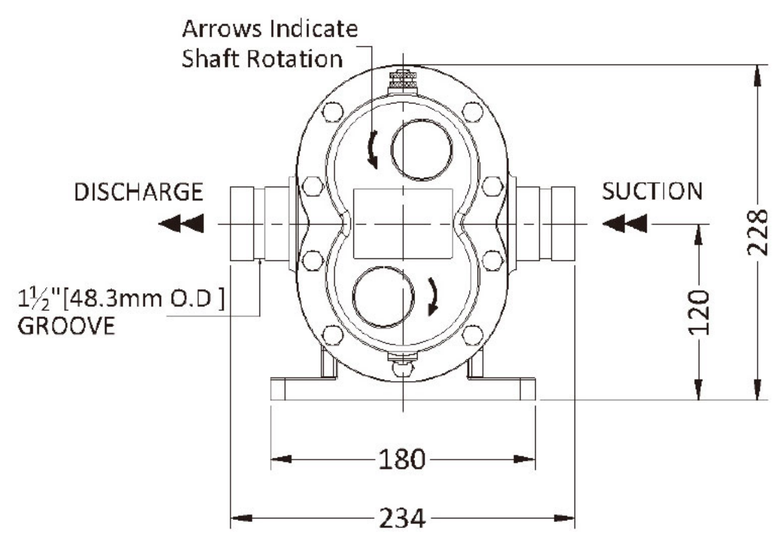

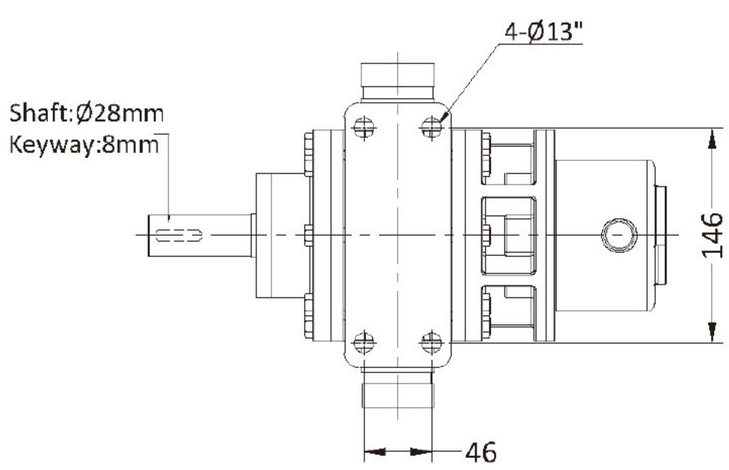

Suction & Discharge:
a. 1½"(48.3mm O.D) Groove (Standard)
b. Threhd G 1½" Male (Option)
c. Flange DIN2633 DN40 PN16 (Option)

Assembly Weight: 34.5 Kg

OPTIONAL :

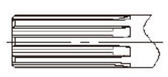

SPLINE SHAFT:
SAE PJ 1⅛"
DIN5482 30×2×14×7H
GB/T1144 6×23×28×6
JIS B1603 28×12×2

Model G6-55
Rotary Gear Pump

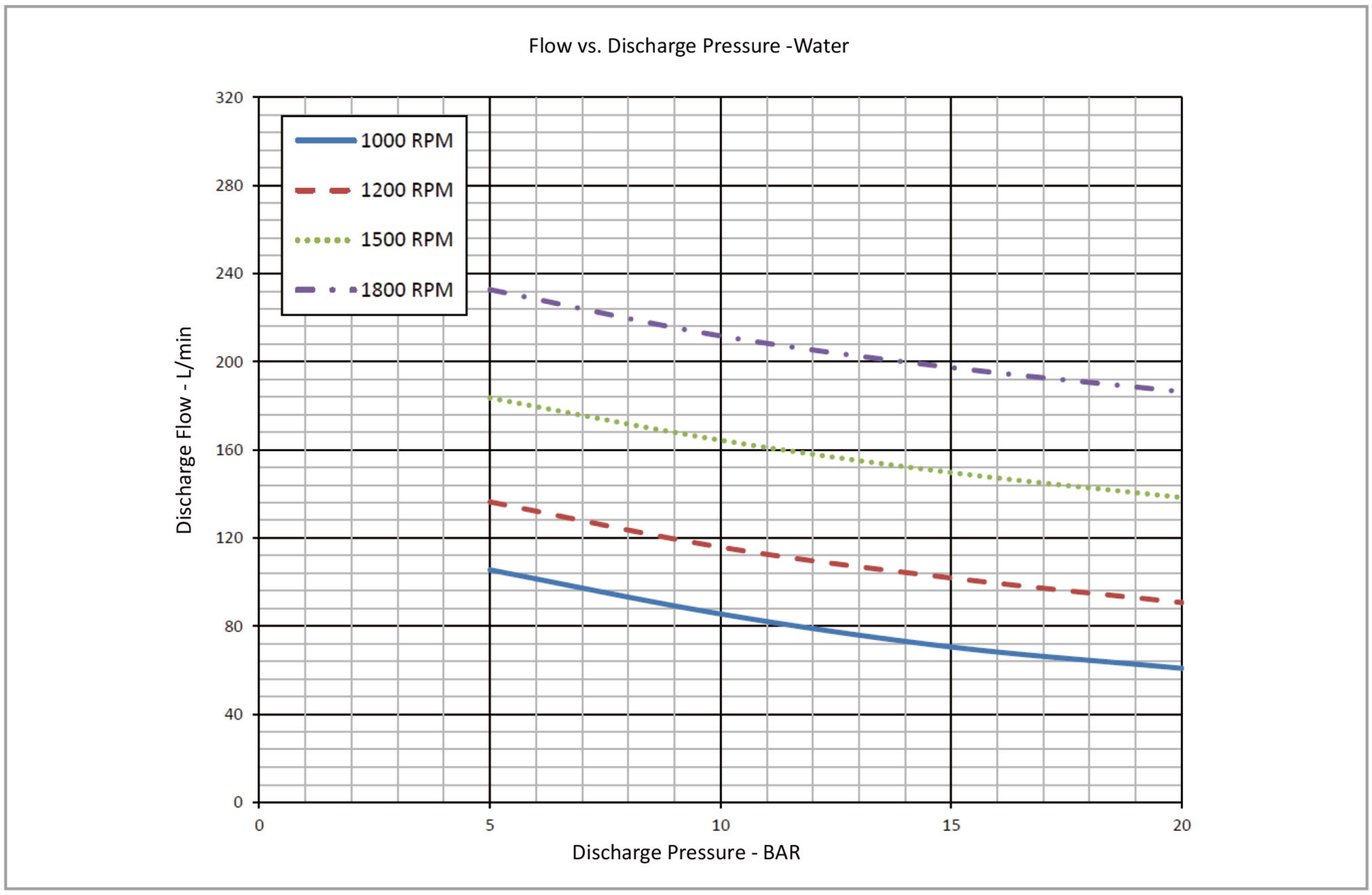

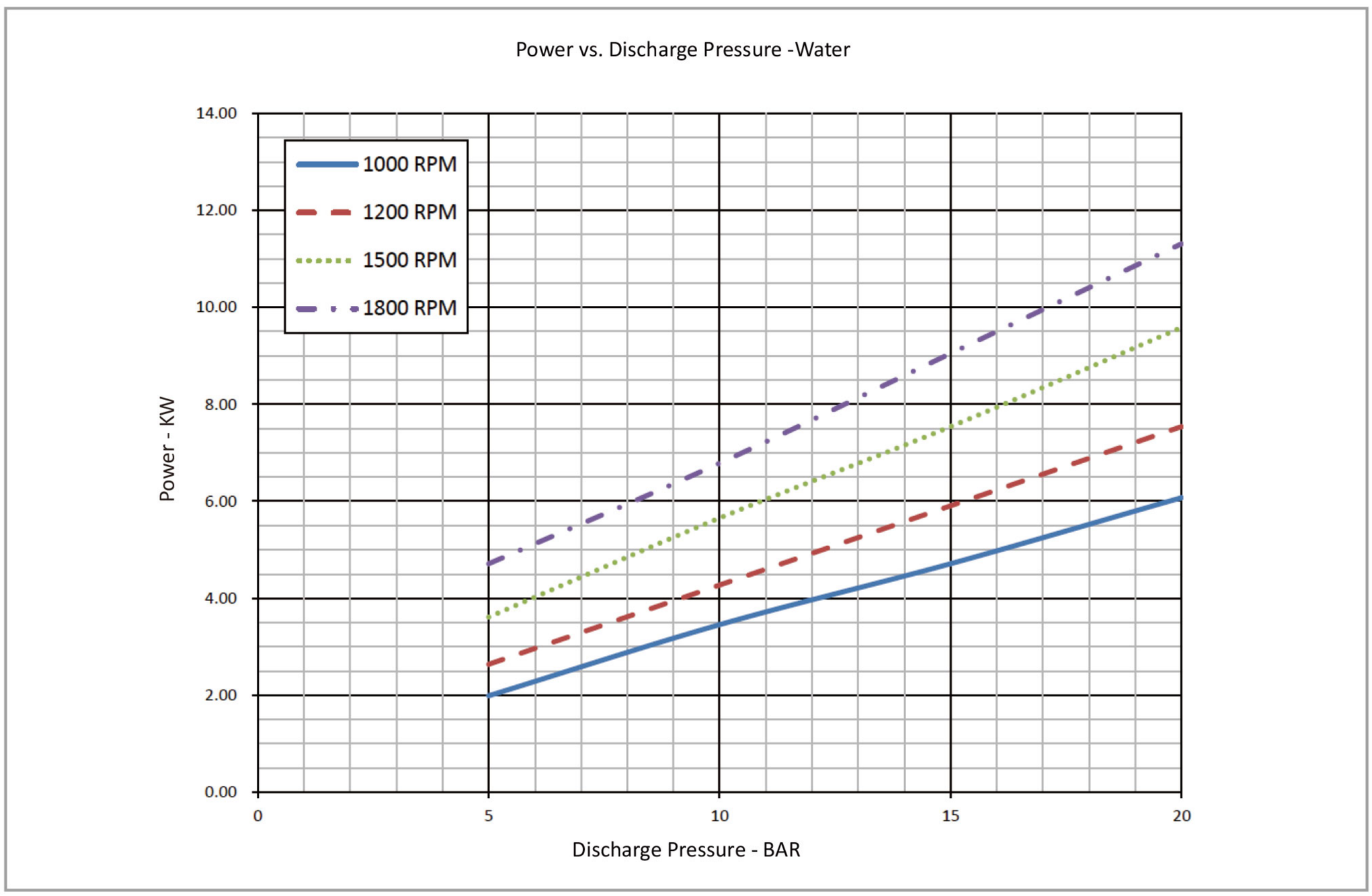

- The pump performance for foam concentrate, please contact Surex, or down load from www.surexfoam.com.